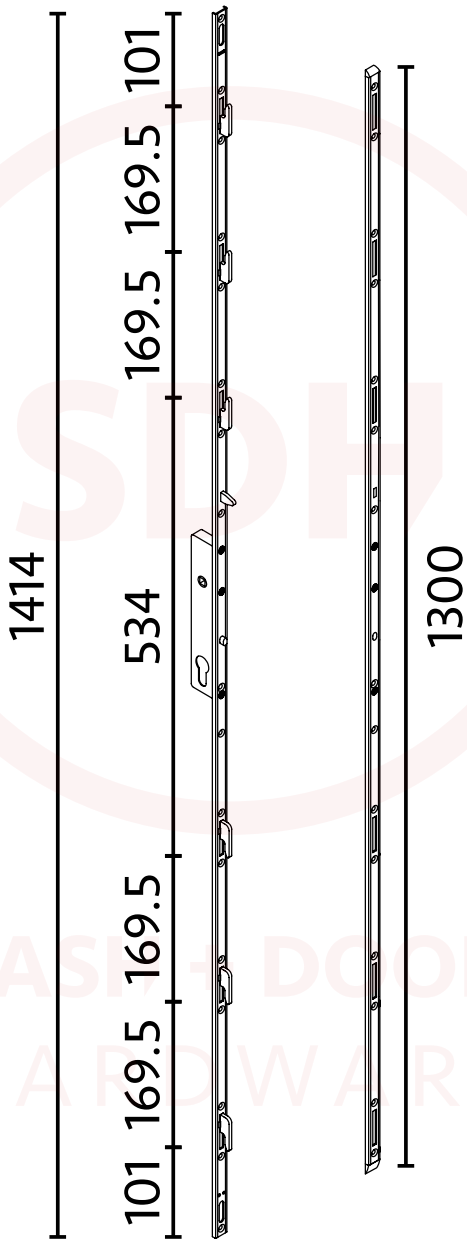Stainless Steel Patio Door Lock