Timber Series Connoisseur Inline Locking Espag Window Handle

TIMBERSERIES

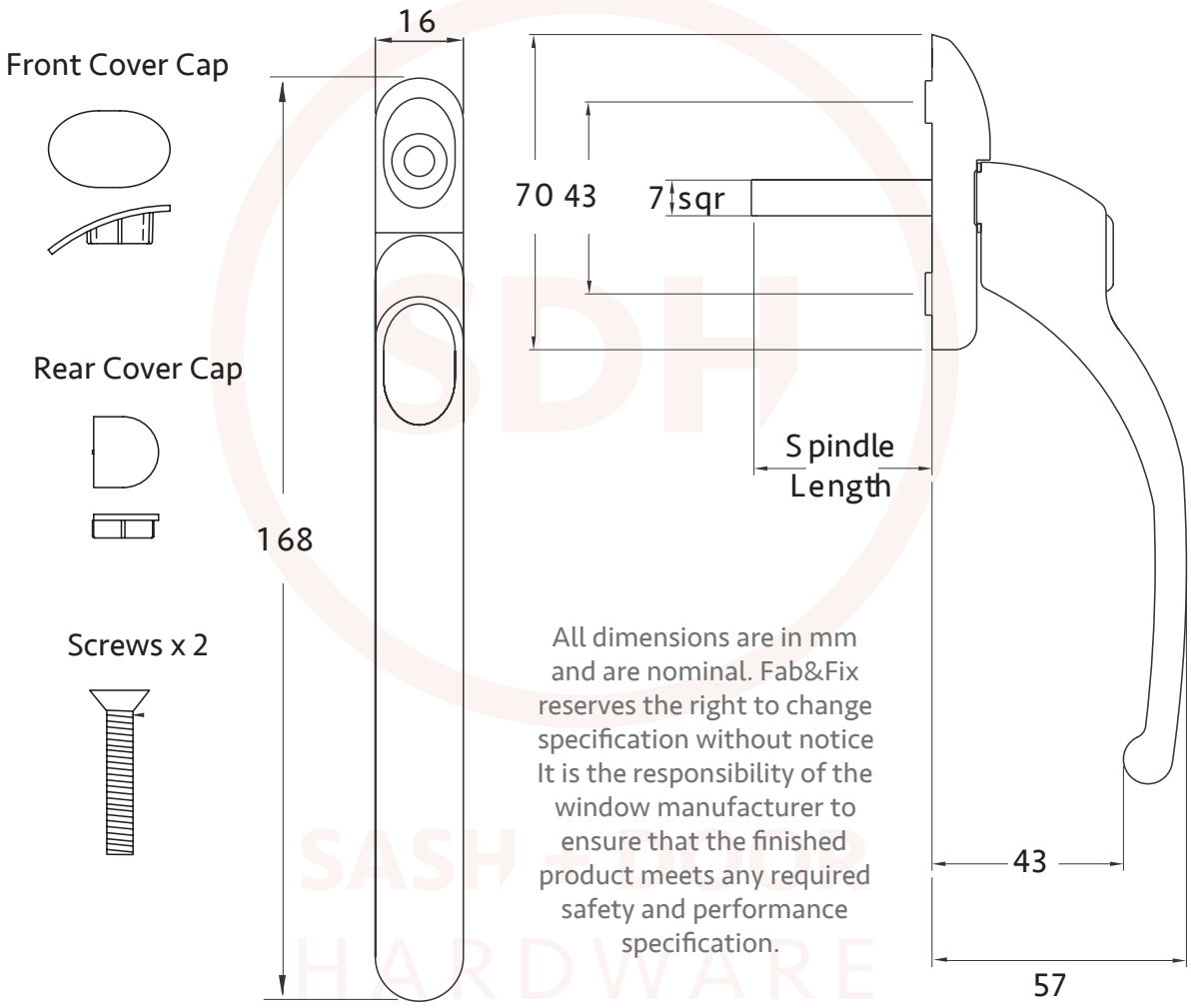

All dimensions are in mm and are nominal. Fab&Fix reserves the right to change specification without notice It is the responsibility of the window manufacturer to ensure that the finished product meets any required safety and performance specification.